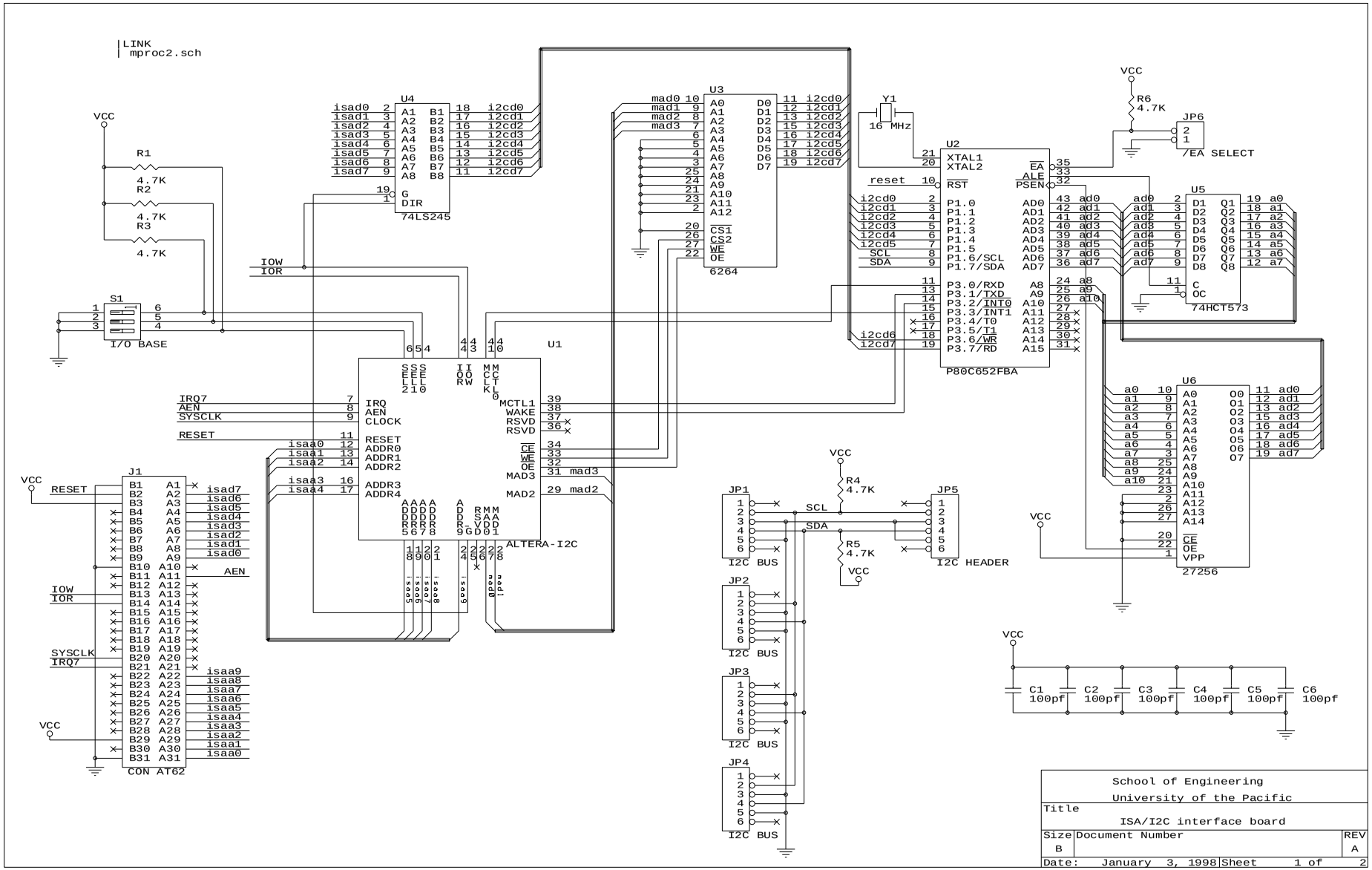
LINK
mproc2.sch
U4
74LS245
U3
6264
U2
P80C652FBA
Y1
16 MHz
U5
74HCT573
JP6
/EA SELECT
U6
27256
U1
ALTERA-I2C
S1
I/O BASE
J1
CON AT62
JP1
JP2
JP3
JP4
JP5
I2C BUS
I2C HEADER
R1
4.7K
R2
4.7K
R3
4.7K
R4
4.7K
R5
4.7K
R6
4.7K
C1
100pf
C2
100pf
C3
100pf
C4
100pf
C5
100pf
C6
100pf
VCC
IOW
IOR
IRQ7
AEN
SYSCLK
RESET
SCL
SDA
School of Engineering
University of the Pacific
Title
ISA/I2C interface board
Size
B
Document Number
REV
A
Date: January 3, 1998
Sheet 1 of 2